MVSY-188 series

SOLENOID **VALVE**

mindman

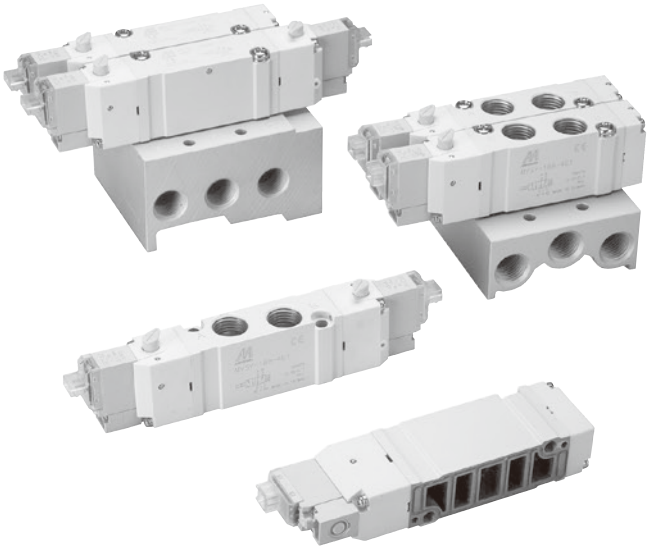

Specification

Model		4E1	4E2	4E2 C.P.R
Bore No.		8A		
Port size		Rc1/4		
No. of port		5		
No. of position		2		3
Medium		Air		
Operating perssure range		0.15~0.7 MPa		0.2~0.7 MPa
Proof pressure		1 MPa		
Effective orifice	Body ported	15 mm^2		16.3/27/12.4 mm^2
	Manifold	13 mm^2		13.5/18.4/11 mm^2
Reponse time		23 ms		50 ms
Ambient temperature		+5~+50°C		
Max. operating frequency		5 Hz		
Voltage		AC110V, 220V (50/60)Hz, DC24/12/6V		
Power consumption		AC=1.6/2.5VA, DC6=1.2W, DC12/24=0.55W		
Available voltage range		±10%		
Insulation class		B class		
Weight		84 g	106 g	116 g

Caution

- Don't continuous energizing for about 2 hours or more.
- The total energizing time of a day don't exceeds the total non-energizing time even if it is intermittent energizing.

Order example of valve

MVSY — 188M — 4E2C — AC110 — LJ1 — G

MODEL

BODY WIDTH

4: 4 way (5 port)

Blank: Body ported type
M: Manifold type

E1: Single Solenoid
E2: Double Solenoid

VOLTAGE
AC220V(50/60)Hz
AC110V(50/60)Hz
DC24V
DC12V
DC6V

C: Closed center
P: Pressure center
R: Exhaust center
(Only for **4E2** type)

PLUG TYPE

LJ: Plug on side (*1)

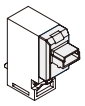

LR: Plug on side (*2)

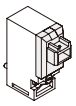

SR: Plug on Top (*2)

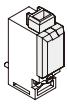

WIRE LENGTH
Blank: 500mm
1: 1000mm
2: 2000mm
3: 3000mm

PORT THREAD
Blank: Rc thread
G: G thread
NPT: NPT thread
(Only for body ported type)

*1. Connector with flying leads **JPC** type.
*2. Connector with flying leads **RMH** type. (Original)

Order example of manifold

MVSY — 188M — 5B3 — G

MODEL

Blank: Body ported type
M: Manifold type

MANIFOLD
5B: 5 port (for body ported type)
5M: 5 port (for manifold type)

MANIFOLD NUMBER
1, 2, 3...

PORT THREAD
Blank: Rc thread
G: G thread
NPT: NPT thread

Order example of wire

* Use the same wire with MVDY.

MVDY — 100 — WA2J2

MODEL

VOLTAGE
A2: AC220V(50/60)Hz
A1: AC110V(50/60)Hz
D: DC24V/12V/6V

WIRE
J: JPC type

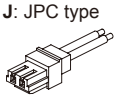

R: RMH type

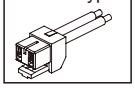

WIRE LENGTH
Blank: 500mm
1: 1000mm
2: 2000mm
3: 3000mm

MVSY-188 Dimensions

SOLENOID **VALVE**

MVSY-188-4E1

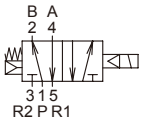

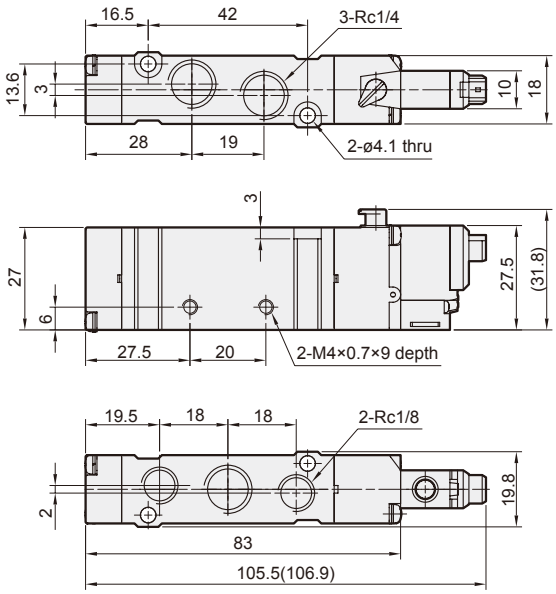

MVSY-188-4E2

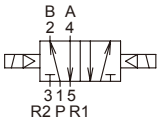

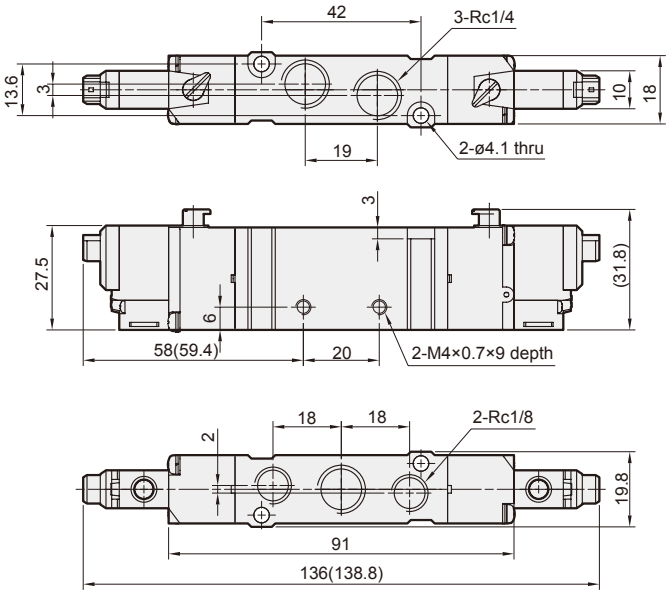

MVSY-188-4E2C.P.R

MVSY-188-4E2C **MVSY-188-4E2P** **MVSY-188-4E2R**

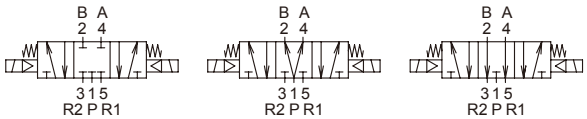

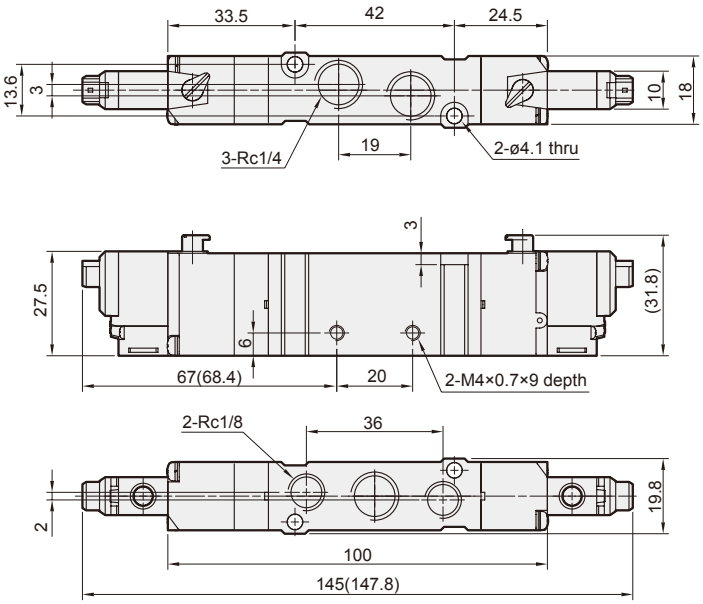

Flow features

MVSY-188-4E1/4E2

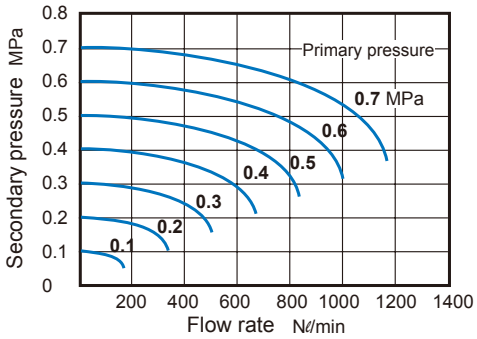

MVSY-188M-4E1/4E2

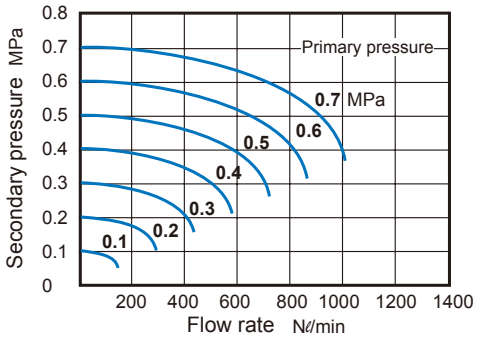

( ): Dimension for **LJ** plug type.

MVSY-188-5B*

5 port (for body ported type)

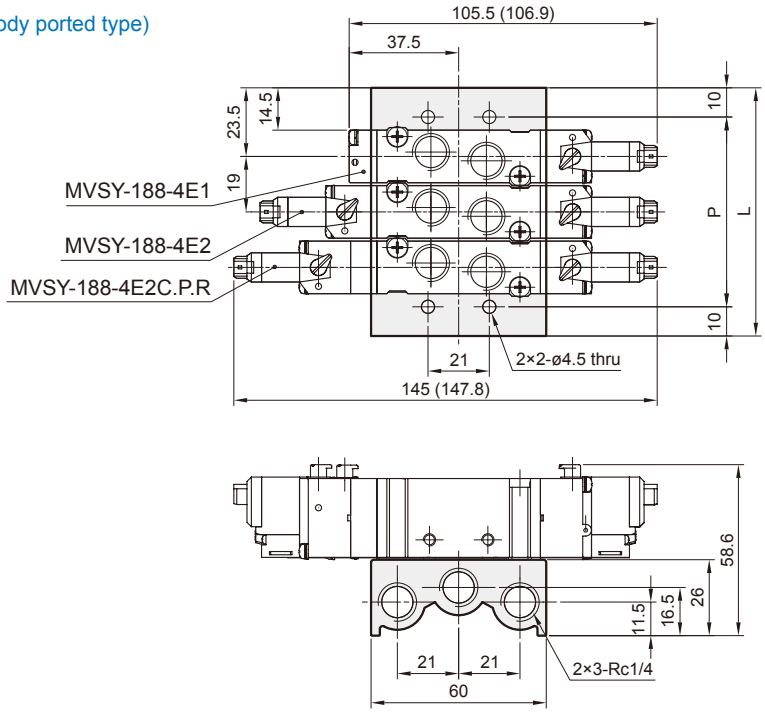

No. of stations	P	L
2	46	66
3	65	85
4	84	104
5	103	123
6	122	142
7	141	161
8	160	180
9	179	199
10	198	218

MVSY-188M-5M*

5 port (for manifold type)

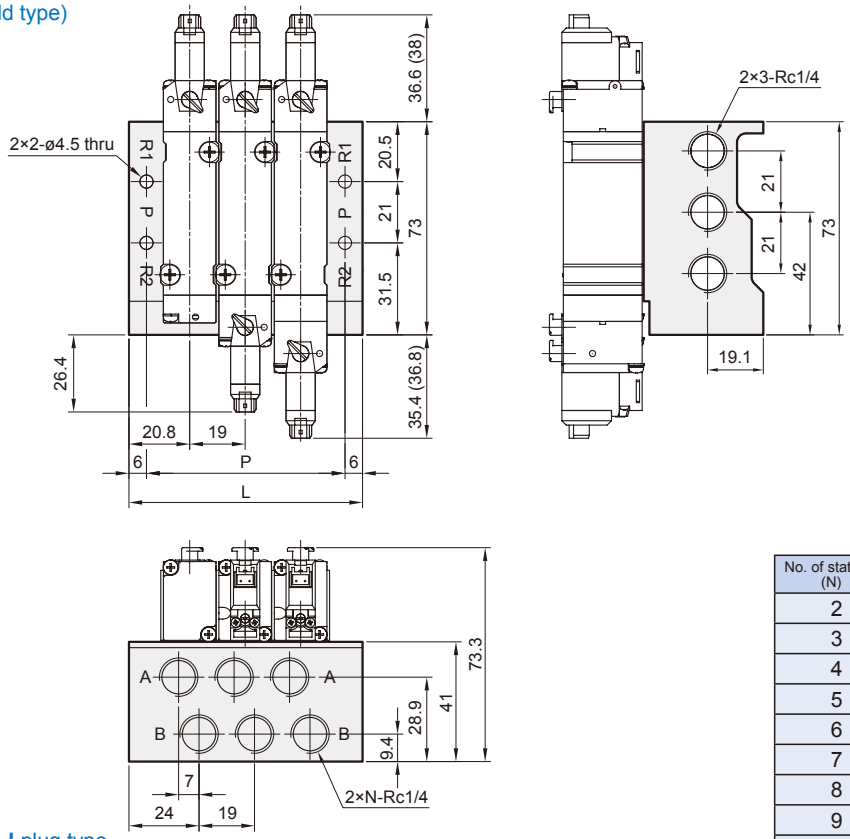

( ): Dimension for **LJ** plug type.

No. of stations (N)	P	L
2	49	61
3	68	80
4	87	99
5	106	118
6	125	137
7	144	156
8	163	175
9	182	194
10	201	213

MVSY-188 Mounting bracket & Spacer assembly

SOLENOID **VALVE**

mindman

Order example of bracket

MVSY — 188 — 1A

- MODEL
- MOUNTING BRACKET
  - **1A**
  - **2A**

Order example of spacer assembly

MVSY — 188M — 5BP

- MODEL
- Blank: Body ported type
  M: Manifold type
- **5B**: 5 Port (for body ported type)
  5M: 5 Port (for manifold type)
- SPACER ASSEMBLY
  - **P**: Individual SUP spacer assembly
  - **R**: Individual EXH spacer assembly
  - **PR**: Individual SUP spacer assembly+ Individual EXH spacer assembly

MVSY-188-1A

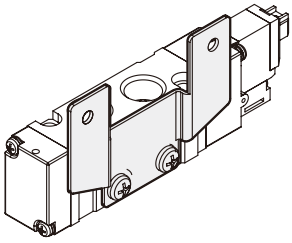

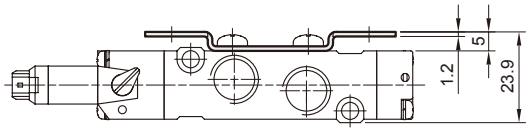

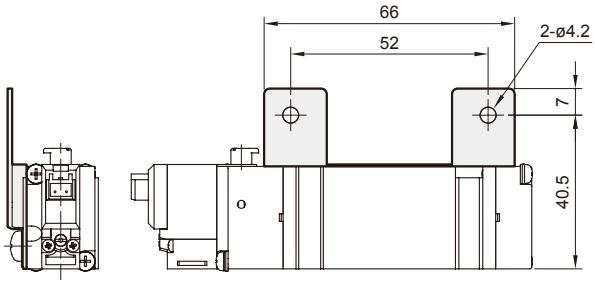

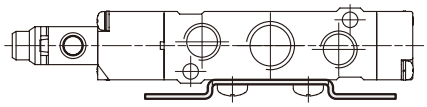

MVSY-188-2A

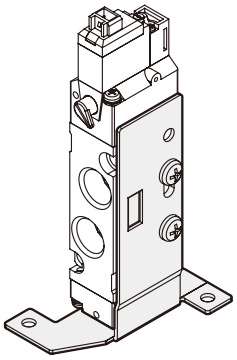

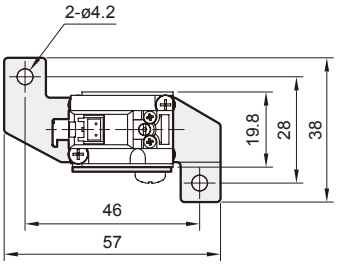

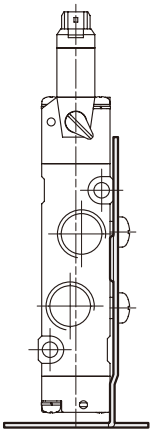

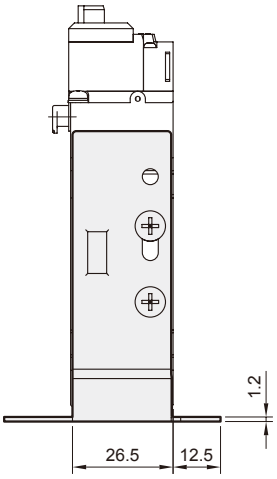

MVSY-188 Spacer assembly

SOLENOID **VALVE**

mindman

for body ported type

MVSY-188-5BP

Individual SUP spacer assembly

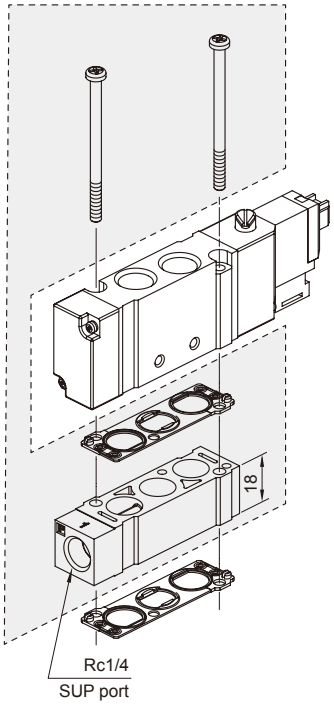

MVSY-188-5BR

Individual EXH spacer assembly

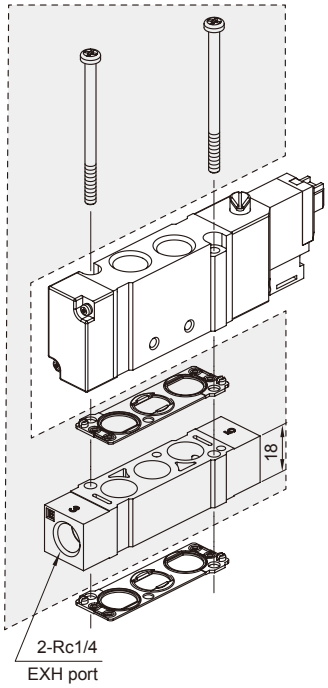

MVSY-188-5BPR

Individual SUP spacer assembly+
Individual EXH spacer assembly

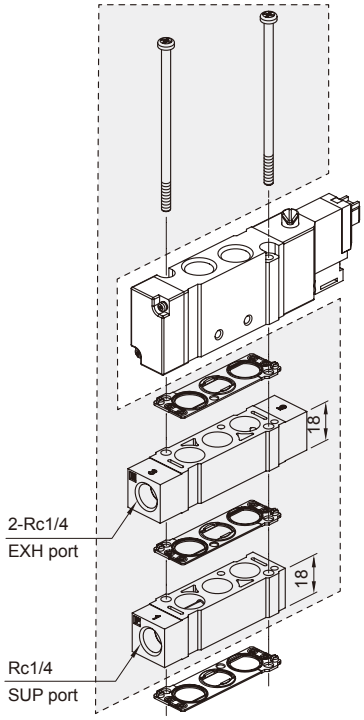

for manifold type

MVSY-188M-5MP

Individual SUP spacer assembly

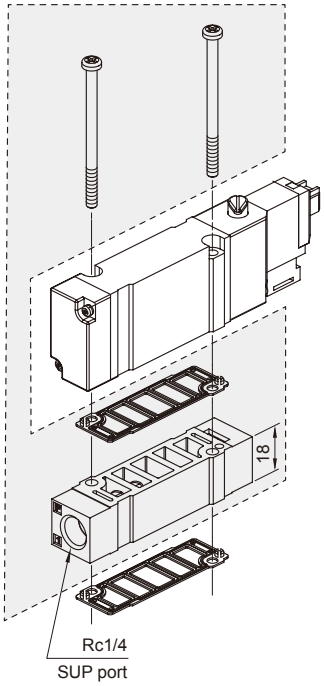

MVSY-188M-5MR

Individual EXH spacer assembly

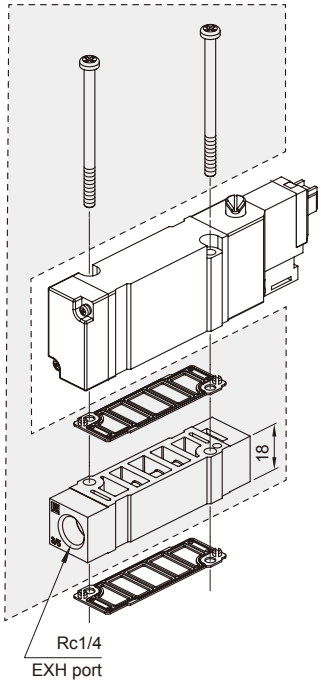

MVSY-188M-5MPR
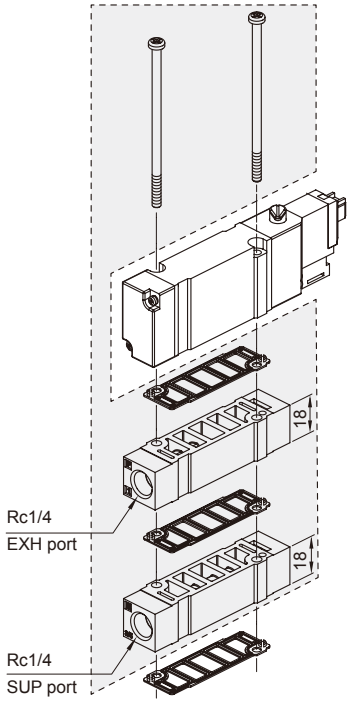
Individual SUP spacer assembly+
Individual EXH spacer assembly